GENERAL MOTORS 2 - 2 1/2"

1988 and Newer, Full-Size 4WD

INSTALLATION INSTRUCTIONS

Kit Part #: C256K, C256KS (6 Lug Models) '80-'96

C2567K, C2567KS (6 Lug Models) - '97-'98

Before beginning the installation, read these instructions and the enclosed driver's "WARNING NOTICE" thoroughly and completely. Also affix the "WARNING" decal in passenger compartment in clear view of all occupants. If any of these items are missing from this instruction packet, do not proceed with installation, but call SKYJACKER® to obtain needed items. If you have any questions or reservations about installing this lift kit, call SKYJACKER® at 318-388-0816 for Technical Assistance or Customer Service departments.

Due to the inconsistency of vehicles when manufactured and the various options available, the amount of actual lift gained by this lift kit will vary.

The amount of lift achievable will be less than stated if torsion bars have been previously torqued up. However, the differential and CV angles will be decreased thus relieving stress caused from the increased ride height.

PRE-INSTALLATION NOTES:

- A professional mechanic is needed to perform the installation.
- Carefully inspect the vehicle's suspension, steering and driveline systems. Pay close attention to the tie rod ends, pitman arm, idler arms, ball joints and wheel bearing preload. Also check for stress cracks at suspension-to-frame and steering-to-frame. The vehicle must be in excellent working condition, and any worn out parts must be repaired or replaced.
- Read the instructions *carefully* and *study* the illustrations before attempting the installation.
- Compare the parts and hardware against the parts listing to assure that the kit is complete.
- Secure and properly block the vehicle on a level concrete or asphalt surface. It will be important that the vehicle is also level side-to-side when on jack stands.
- Measure the height of vehicle at each tire to check for any existing variances in vehicle's levelness.
- Always wear safety glasses.
- Use caution when cutting is required.

IMPORTANT NOTES:

- Front end realignment is necessary.
- Torsion Bar adjustment may be necessary to achieve desired lift.
- If larger tires (10% more than stock diameter) are installed, speedometer recalibration is necessary (see GM dealer or Tire Store). A Speedometer Recalibration Guide is included for assistance.
- This lift utilizes the stock torsion bars which normally provide the best ride quality. After the lift is installed, if suspension seems too "soft" heavier rated bars can be installed. If the vehicle is equipped with light duty torsion bars, replacement with heavier rated bars can also increase the front lift if desired. Various torsion bar replacements (such as those from a Z71 model, or light ¾ ton bars, if vehicle is a Z71) are available direct from GM dealers.

FRONT INSTALLATION:

1. Put vehicle in neutral. Place floor jack under the lower control arm's front cross member and raise vehicle. Place jack stands under frame rails, behind the front wheel wells, and lower the frame onto the stands. Put the vehicle in gear, setting emergency brake, and block rear wheels, in front and behind tires. Remove front tires, shocks and anti-sway bar connecting links. **(Diagram 1)**

WARNING: Be extremely careful when loading or unloading the torsion bars; there is a tremendous amount if stored energy (load pressure) in the bars. Keep your hands and body clear of the adjuster arm assembly and puller tool in case anything slips or breaks.

NOTE: A special PULLER TOOL is required for SAFE REMOVAL/INSTALLATION of the adjuster arms. This special puller can be purchased from a GM Dealer (Tool #J36202) or from Kent Moore Tool Group, Roseville, MI (800) 345-2233 or (313) 774-9500 (Part #J-22517-C).

2. After studying **Diagram 2**, remove the torsion bar adjusting bolt. Apply a small amount of lubricating grease to the puller threads and the puller shaft-to-adjuster arm contact point. Position puller and load adjuster arm until the adjuster block can be removed from the cross member.

3. Place a floor jack under the lower control arm on one side of the vehicle. Raise the arm about 1" and leave the jack in place. Remove the cotter pin and loosen the nut on the upper ball joint approximately 5 turns. Lower the floor jack until it is no longer supporting the lower arm. Use a ball joint separator fork (pickle fork) to separate the ball joint from the spindle. Raise the lower arm with the floor jack again, and remove the ball joint nut. Carefully lower the floor jack until the arm is hanging freely. Repeat this procedure on the other side of the vehicle.

4. Remove the nuts and bolts that hold the upper control arms on the frame (they will be reused), and remove the arms from the vehicle. **(Diagram 3)**

5. Clamp the control arm tightly in a vise. Carefully center punch the rivet heads, and drill a ¼" deep hole into the rivets using a 1/8" drill bit. Next use a 1/2" bit and very carefully drill through the rivet head until the head comes free of the rivet. Be very careful not to drill into the ball joint housing. Using a 5/16" drift punch and a hammer, drive the rivets out of the ball joint. (If ball joints show wear, replace them at this time.)

6. Using the 5/16" bolts, washers and locknuts supplied, attach the ball joints to the new control arms. Torque the bolts to 20 ft.lbs.

7. Lubricate the urethane bushings with a high quality waterproof grease. Install them in the control arm tubes, and press the 1 7/8" long sleeves into the bushing holes.

8. Install the control arms on the truck, using one large flat washer (1 7/8", supplied in kit) on each side of each control arm mount (4 washers per control arm). **NOTE: BE SURE TO INSTALL THE CONTROL ARMS WITH THE GUSSETED TUBE (TUBE WITH A WELDED TAB) TOWARD THE FRONT OF VEHICLE.** Torque the mounting bolts to 90 ft.lbs. (original bolts). Raise the lower control arm enough to reinstall the ball joint. Tighten the ball joint nut to 95 ft.lbs. Advance the nut to the next available slot for the cotter pin, and install the new cotter pin supplied in the kit.

9. Remove the skid plate from the differential carrier, if so equipped. Place a floor jack under the differential to support it. Remove the bolts and nuts retaining the axle tube, then remove the bolts

and nuts that retain the differential carrier. **(Diagram 4)**

10. Remove the bolts retaining the axle tube cross member, and remove the cross member from the vehicle. Next remove the two remaining bolts holding the front differential to the chassis. **(Diagram 5)**

11. Next it will be necessary to remove the mounting tab on the driver's side on the vehicle. Cut the tab off at the weld, as shown, using a die grinder with a cutoff wheel (or hacksaw). Grind or file the remaining weld flush with the surface. **(Photo 6)**

12. Lower the differential enough to install the new axle tube cross member. Use the polyurethane bushings and sleeves included in the new cross member, and you will use all existing hardware to install the cross member. The short end of the cross member is installed toward the front of the vehicle. **Some models will require the short end of the cross member to be installed toward the rear to allow for proper alignment of the differential.(Photo 7 & 8) Do NOT tighten any of the bolts at this time.**

13. Install the Upper differential lowering tubes as shown, using the 9/16" x 5" bolt, locknut and flat washers provided. Be sure to insert the spacer tube between the two brackets, with a large flat washer on each end. **(Photo 9) Do NOT tighten any of the bolts at this time.**

14. Install the driver's side lowering bracket at this time. Use the 9/16" x 1 1/2" bolt, nut and washers to hold the bracket in the existing hole behind the lower A-arm mount. Carefully mark the remaining 1/2" hole to be drilled. Remove the bracket, then carefully center punch and drill the remaining hole. Mount the bracket as shown, **but do NOT tighten the bolts yet. (Photo 10)**

15. Align the mounting bushings in the front differential housing with the brackets, and install the factory bolts, washers ad nuts now. **Tighten all factory bolts and nuts to 80 ft.lbs. Tighten remaining 1/2" bolts to 50-55 ft.lbs., and the 9/16" bolts to 65-70 ft.lbs.**

16. Install and load the torsion bars reversing the sequence of instructions in step #3, again being very careful. If installing new torsion bars, do so at this time.

17. If so equipped, reinstall the skid plate using the factory hardware on the rear of skid, and in the front of skid plate insert new spacer blocks between frame and skid plate and install new 10mm x 70mm bolts and washers provided. Tighten bolts into frame.

18. Shorten the anti-sway bar connecting link sleeves 3/8" with a hacksaw or die grinder. Reinstall the shortened sleeves using the supplied 3/8" x 8" bolts, washers and nuts, re-using the factory rubber grommets.

***NOTE: If '97 & Up model, install front brake lines at this time. Refer to brake line instructions to install.**

19. Check all nuts, bolts and hardware for tightness. Install new shock absorbers, reinstall tires and lower vehicle to the ground.

REAR INSTALLATION:

20. Place a floor jack under rear axle and raise vehicle. Place jack stands under the frame to support vehicle and remove the rear wheels.

21. With the floor jack, raise the rear axle enough to relieve tension on the shock absorbers and remove them. Remove the U-bolts and lower axle down a few inches. **Care should be taken because when U-bolts are removed, axle can move freely.**

IF INSTALLING A SOFTRIDE® "SYSTEM" WITH NEW REAR SPRINGS, SKIP TO STEP #23.

22. ADD-A-LEAF INSTALLATION: Disassemble the rear leaf springs. Reassemble the springs while inserting the new add-a-leaf into the leaf spring pack so that the leaves remain progressive longest to shortest (will normally be installed under the second leaf). Re-mount the axle to the springs using the existing spring plates, U-bolts and nuts. Tighten nuts, then install the tires and lower vehicle down. Skip to step 25.

23. NEW SPRING INSTALLATION: Remove the original springs and install the new SOFTRIDE® springs supplied with this "SYSTEM" into the original mounts with the long end of the new springs toward the rear. DO NOT TIGHTEN SPRING EYE BOLTS AT THIS TIME. Re-mount the axle to the springs using the existing spring plates, U-bolts and nuts. Tighten nuts, then install the tires and lower vehicle down. Bounce rear of vehicle to seat in unsprung bushings and springs, then tighten the spring eye bolts. Continue to step #25.

INSTALLATION COMPLETION:

25. After rear lift is complete, a final ride height adjustment should be performed. Manually bounce the front and rear of the vehicle to settle in the bars and springs. Evenly adjust the torsion bar bolts until the front of the vehicle is at desired ride height. Each bar may require slightly different adjustment to level vehicle side-to-side, and the bars may settle slightly after vehicle is driven.

NOTE: It will be necessary to have the front end aligned after the installation is complete.

FINAL NOTES:

- After installation is complete, double check that all nuts and bolts are tight.
- With the vehicle on the floor, cycle steering lock to lock and inspect steering, suspension and drive-line systems for proper operation, tightness and adequate clearance. Recheck brake hose/fittings for leaks. Be sure all hoses, including the rear, are long enough.
- Have headlights readjusted to proper settings.
- Have a *qualified* alignment center realign front end to factory specifications. Be sure vehicle is at desired ride height *prior* to realignment.

Diagram 1

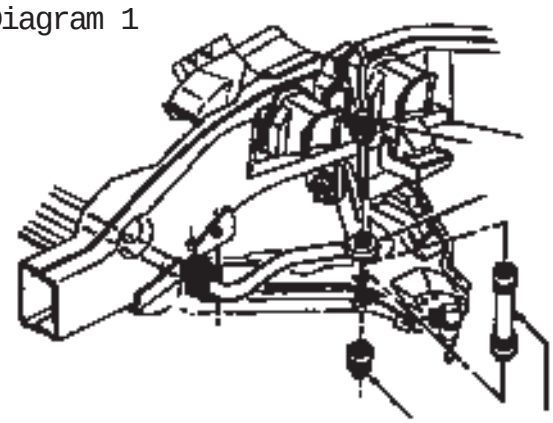

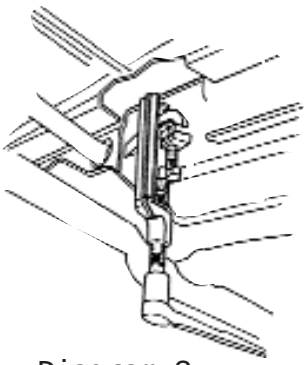

Diagram 2

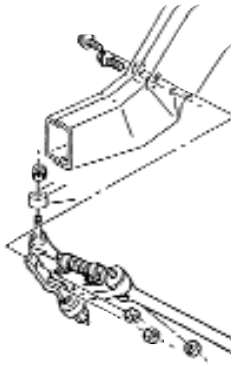

Diagram 3

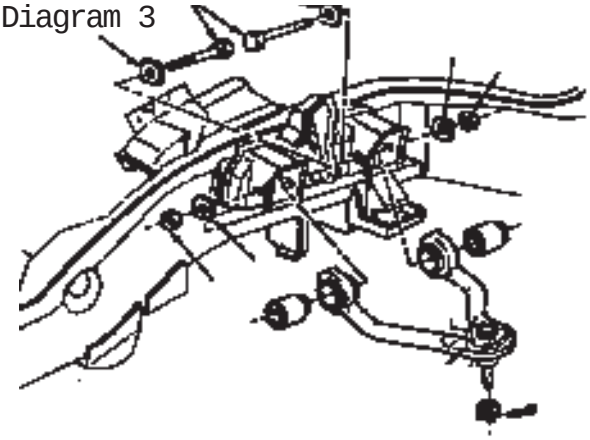

Diagram 4

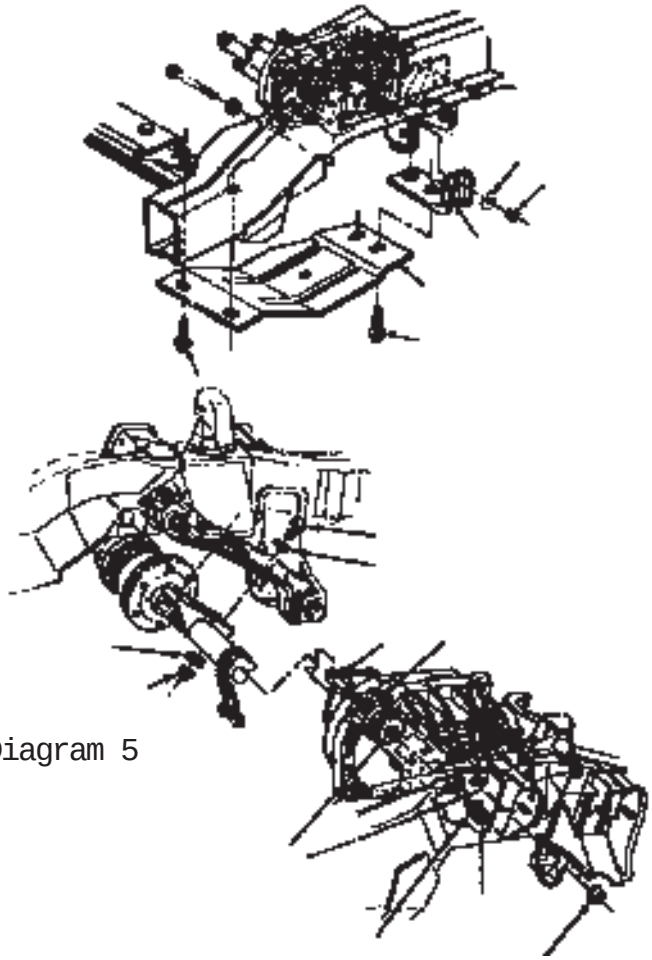

Diagram 5

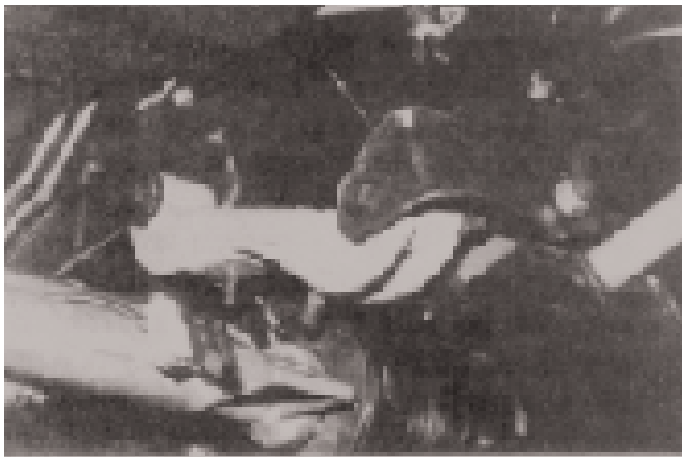

PHOTO 7

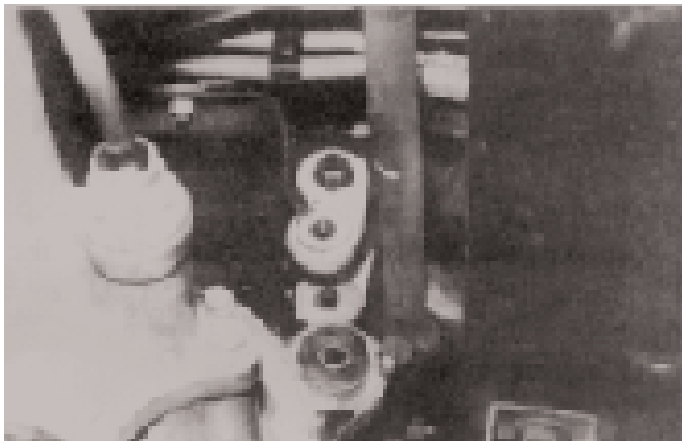

PHOTO 8

PHOTO 9

PHOTO 6

PHOTO 10

SPEEDOMETER RECALIBRATION GUIDE

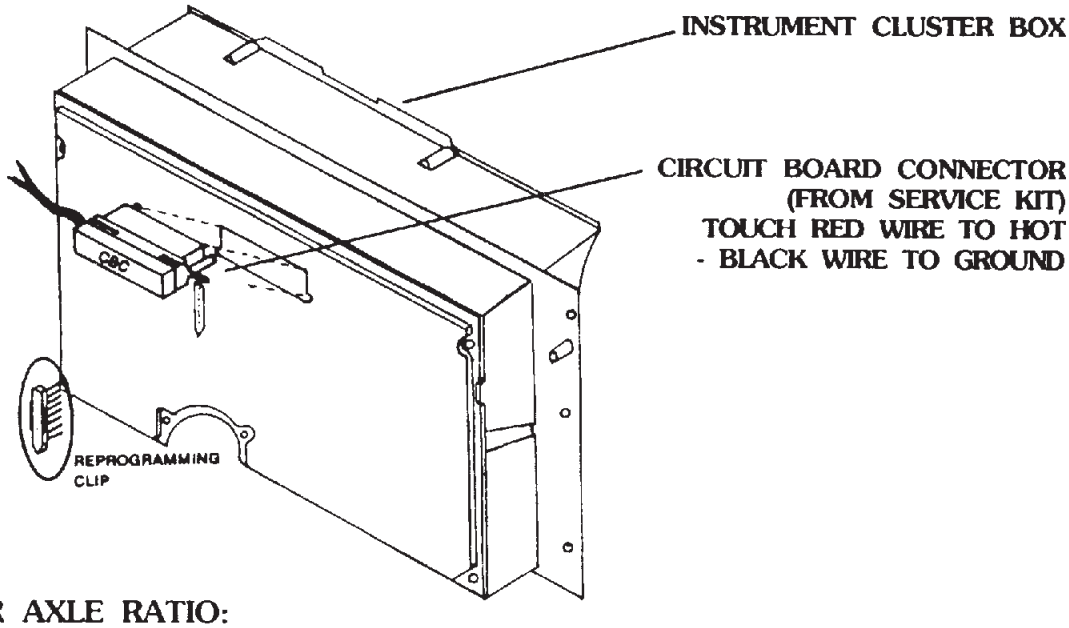

DETERMINE REAR AXLE RATIO:

- Write down the three letter code found on the passenger side rear axle tube.
- Call your GM or Chevy truck dealer and give them the model information and three letter code. They can then tell you the rear axle ratio.

DETERMINE <u>ACTUAL</u> TIRE HEIGHT:

- Make sure the tires are inflated to the correct pressure.
- Measure from the ground to the top of the tire to find actual height.

RECALIBRATE SPEEDOMETER:

- Follow the guide (as to which pins are to be removed from the programming clip); pins noted with O are to be removed and pins noted with - are to be left alone.

Rear Axle Ratio Ratio	Actual Tire Diameter In Inches	Pins to remove = O 7	6	5	4	3	2	1
3.42	31	-	-	O	O	O	O	-
	32	-	-	O	O	O	-	-
	33	-	-	O	O	-	-	O
	34	-	-	O	-	O	O	-
	35	-	-	O	-	O	-	-
	36	-	-	O	-	-	-	O
3.73	31	-	O	-	-	O	O	-
	32	-	O	-	-	-	O	O
	33	-	O	-	-	-	-	O
	34	-	-	O	O	O	O	-
	35	-	-	O	O	-	O	O
	36	-	-	O	O	-	-	O
4.10	31	-	O	-	O	O	O	O
	32	-	O	-	O	O	-	-
	33	-	O	-	O	-	-	O
	34	-	O	-	-	O	O	-
	35	-	O	-	-	O	-	-
	36	-	O	-	-	-	-	O
4.56	31	-	O	O	O	-	-	-
	32	-	O	O	-	O	-	O
	33	-	O	O	-	-	O	O
	34	-	O	O	-	-	-	-
	35	-	O	-	O	O	O	-
	36	-	O	-	O	-	O	O

KIT PARTS LISTING

C 256K 2" 88-96 IFS 6 LUG W/RR ADD-A-LEAF

ITEM	DESCRIPTION	QTY
C256	COMPONENT KIT BOX 88-96IFS 6 LUG	1
R1120	ADD-A-LEAFS REAR	1pr.

KIT BOX BREAKDOWN:

C256-L	2" IFSGM DRIVER SIDE A-ARM	1
C256-R	2" IFSGM PASSENGER SIDE A-ARM	1
C256-DP	2" IFSGM DIFF. BRKET PASS SIDE	1
C256-DDR	2" IFSGM DIFF. BRKET DRVR SIDE REAR	1
C256-DDFL	2" IFSGM DIFF. DRIVER FRT. LEFT	1
C256-DDFR	2" IFSGM DIFF. DRIVER FRT. RIGHT	1
HB-C256	HARDWARE BAG FOR C256	1

HARDWARE BAG BREAKDOWN:

2437	BUSHING FOR 2" IFS GM	12
GM2A	SLEEVE .75 x .565 x 1.88 2" GM	4
GM2C	SLEEVE .75 x .565 x 2.425 2" GM	2
GM2D	SLEEVE .69 x .565 x 2.155 2" GM	1
12X112FTB	1/2" x 1½" FINE THREAD BOLT	1
12FTN	1/2" FINE THREAD NUT	1
12SAE	1/2" SAE WASHER	2
38X8FTB	3/8" x 8 FINE THREAD BOLT	2
38FTN	3/8" FINE THREAD NUT	2
38X114FW	3/8" x 1¼" FENDER WASHER	10
10MMX70MMB	10 x 70 METRIC BOLT/10.9	2
516X1FTB	5/16" x 1" FINE THREAD BOLT	8
516FTN	5/16" FINE THREAD NUT	8
516SAEW	5/16" SAE WASHER	8
916X112FTB	9/16" x 1½" FINE THREAD BOLT	1
916X5FTB	9/16" 5" FINE THREAD BOLT	2
916FTN	9/16" FINE THREAD NUT	3
916SAEW	9/16" SAE WASHERS	6
58USSW	5/8" USS WASHER	10
18X112CP	1/8" X 1½" COTTER PIN	2
SPL100	SKID PLATE LOWERING BLOCKS	2

KIT PARTS LISTING

C 2567K 2" 97-98 IFS 6 LUG W/RR ADD-A-LEAF

ITEM	DESCRIPTION	QTY
C256	COMPONENT KIT BOX 97 > IFS 6 LUG	1
R1120	ADD-A-LEAFS REAR	1pr.

KIT BOX BREAKDOWN:

C256-L	2" IFSGM DRIVER SIDE A-ARM	1
C256-R	2" IFSGM PASSENGER SIDE A-ARM	1
C256-DP	2" IFSGM DIFF. BRKET PASS SIDE	1
C256-DDR	2" IFSGM DIFF. BRKET DRVR SIDE REAR	1
C256-DDFL-97	2" IFSGM DIFF. DRIVER FRT. LEFT	1
C256-DDFR-97	2" IFSGM DIFF. DRIVER FRT. RIGHT	1
FBL97	FRT. BRAKE LINES 97 GM IFS	1
HB-C256	HARDWARE BAG FOR C256	1

HARDWARE BAG BREAKDOWN:

2437	BUSHING FOR 2" IFS GM	12
GM2A	SLEEVE .75 x .565 x 1.88 2" GM	4
GM2C	SLEEVE .75 x .565 x 2.425 2" GM	2
GM2D	SLEEVE .69 x .565 x 2.155 2" GM	1
12X112FTB	1/2" x 1½" FINE THREAD BOLT	1
12FTN	1/2" FINE THREAD NUT	1
12SAE	1/2" SAE WASHER	2
38X8FTB	3/8" x 8 FINE THREAD BOLT	2
38FTN	3/8" FINE THREAD NUT	2
38X114FW	3/8" x 1¼" FENDER WASHER	10
10MMX70MMB	10 x 70 METRIC BOLT/10.9	2
516X1FTB	5/16" x 1" FINE THREAD BOLT	8
516FTN	5/16" FINE THREAD NUT	8
516SAEW	5/16" SAE WASHER	8
916X112FTB	9/16" x 1½" FINE THREAD BOLT	1
916X5FTB	9/16" 5" FINE THREAD BOLT	2
916FTN	9/16" FINE THREAD NUT	3
916SAEW	9/16" SAE WASHERS	6
58USSW	5/8" USS WASHER	10
18X112CP	1/8" X 1½" COTTER PIN	2
SPL100	SKID PLATE LOWERING BLOCKS	2