INSTALLATION INSTRUCTIONS FOR 2000-2005 FORD 4WD EXCURSION 4" SUSPENSION SYSTEM

Requires the following parts (sold separately) for a complete installation:

- **Front Leaf Springs – P/N 60SD2**
- **Hardware Kit – P/N 6000HE**
- **Box Kit – P/N 6005B**

WARNING!!! READ AND UNDERSTAND ALL INSTRUCTIONS BEFORE PROCEEDING. MAKE SURE THAT YOU HAVE ALL TOOLS AND PARTS BEFORE BEGINNING THE INSTALLATION.

SPECIAL ITEMS REQUIRED:

- STEERING (PITMAN) ARM PULLER
- TIE ROD SEPARATING TOOL
- TORQUE WRENCH
- FORD SERVICE MANUAL

REVTEK INDUSTRIES RECOMMENDS THAT RED LOCTITE BE USED ON ALL FASTENERS UNLESS OTHERWISE NOTED. IT IS ALSO RECOMMENDED TO HAVE THE FRONT END ALIGNMENT CHECKED AFTER INSTALLATION.

GENERAL NOTES:

1. THIS SYSTEM SHOULD ONLY BE INSTALLED BY A PROFESSIONAL MECHANIC.
2. Compare all contents of the boxes to the parts list before starting to insure all components are included.
3. Prior to installing the suspension system, inspect the vehicle's suspension components, alignment, and frame for damage, corrosion, or cracks. Correct any worn or damaged parts before beginning install.
4. Always wear safety glasses during installation
5. On most vehicles, removal of the front bumper may be necessary in order to remove front spring eye bolts.
6. Install all nuts and bolts with a flat washer on both sides.
7. Unless otherwise noted, tighten all bolts to the torque specifications listed in the Torque Specification table included in these instructions. Use a torque wrench.
8. Estimated time to install this system is 6 hours.
9. Suspension components that use rubber or urethane bushings should be tightened with the vehicle at normal ride height. This will prevent premature failure of the bushing and maintain ride comfort
10. Check off the step number at the beginning of each step when you finish it. Then when you stop during the installation, it will be easier to find where you need to continue from.

REVTEK INDUSTRIES
INSTALLATION INSTRUCTIONS FOR 2000-2005
FORD 4WD EXCURSION

KIT CONTENTS INCLUDE:

- Instructions including parts list
- Product Safety Label (orange)
- Decal
- Warranty Information

PARTS LIST INCLUDED IN KIT

	PART #	QTY.
4” EXCURSION FRONT SPRING	60SD2	2

HARDWARE KIT – 6000HE

REAR 5” CAST BLOCKS	CB5SD	2
REAR 5/8 X 3 5/8 X 14 1/2 U-BOLTS	R538145B	4
5/8” HIGH NUT	R58HNB	8
5/8” FLAT WASHER	R58FWB	8
FRONT SHOCKS WITH BLACK BOOTS	R2615	2

BOX KIT -- 6005B -- WITH SEMI ROUND FRONT U-BOLTS

	PART #	QTY
PITMAN ARM (FD500)	P500	1
½ - 13 GRADE C ALL METAL LOCKNUT (ZINC)	R12CMLZ	1
½’ FLAT WASHER (ZINC)	R12FWZ	6
½ - 13 X 3 ¼ GRADE 8 HEX BOLT (ZINC)	R314128Z	1
4” REAR SHOCKS W/BAR PIN	R3319	2
9/16 FLAT WASHER	R916FWB	8
9/16 HIGH NUT	R916HNB	8
9/16 X 3 1/8 X 9” SEMI ROUND U-BOLT	R9389SRTB	4
TRACK ARM BRACKET – LG HOLE	TSD2	1
½ - 13 X 2” GRADE 8 BOLTS (ZINC)	R2128Z	2
½ - 13 NYLOCK NUTS (ZINC)	R128NZ	2
SWAY BAR SUPPORT BRACKETS	RSWB1	2

STANDARD BOLT TORQUE & IDENTIFICATION

INCH SYSTEM			METRIC SYSTEM			
Bolt Size	Grade 5	Grade 8	Bolt Size	Class 9.8	Class 10.9	Class 12.9
5/16	15 ft. lbs.	20 ft. lbs.	M6	5 ft. lbs.	9 ft. lbs.	12 ft. lbs.
3/8	30 ft. lbs.	35 ft. lbs.	M8	18 ft. lbs.	23 ft. lbs.	27 ft. lbs.
7/16	45 ft. lbs.	60 ft. lbs.	M10	32 ft. lbs.	45 ft. lbs.	50 ft. lbs.
½	65 ft. lbs.	90 ft. lbs.	M12	55 ft. lbs.	75 ft. lbs.	90 ft. lbs.
9/16	95 ft. lbs.	130 ft. lbs.	M14	85 ft. lbs.	120 ft. lbs.	145 ft. lbs.
5/8	135 ft. lbs.	175 ft. lbs.	M16	130 ft. lbs.	165 ft. lbs.	210 ft. lbs.
¾	185 ft. lbs.	280 ft. lbs.	M18	170 ft. lbs.	240 ft. lbs.	290 ft. lbs.

1/2-13x1.75 HHCS

D T L X

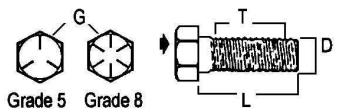

G= Grade Marking (bolt strength) L= Length (inches)
D= Nominal Diameter (inches) X= Description (hex head cap screw)
T= Thread Pitch (threads per inch)

M12-1.25x50 HHCS

D T L X

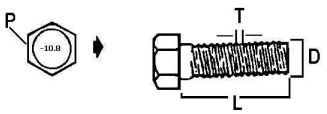

P= Property Class (bolt strength) L= Length (millimeters)
D= Nominal Diameter (millimeters) X= Description (hex head cap screw)
T= Thread Pitch (thread width, mm)

REVTEK INDUSTRIES
INSTALLATION INSTRUCTIONS FOR 2000-2005
FORD 4WD EXCURSION

FRONT OF VEHICLE – DISASSEMBLY AND ASSEMBLY

1. Park vehicle on level, hard (concrete) surface.
2. Block the rear wheels of the vehicle to prevent vehicle from moving in either direction and set parking brake.
3. Remove front bumper by removing (2) outer 13mm brace bolts and the (4) 18mm bolts from front of bumper.

   If the vehicle contains a crash bar below the bumper, it must be removed. To accomplish this, remove the (6) 21mm nuts.

   While supporting the bumper, disconnect the (2) lighting harness plugs and wiring harness from bumper (if applicable), and the (3) plastic push clips in the rubber shield. Carefully remove bumper, making sure not to scratch the paint on the front fenders.
4. To make access to spring eye bolts, remove (2) 8mm bolts at the lower corner supports of air conditioning cooler and remove supports. See Illustration 1.
5. Remove the track bar bolt (30 mm) (save for later use) on the driver side of the frame mount (see illustration 2), and the tie rod end from the pitman arm.
6. Raise the front of vehicle and support with jack stands on the frame behind the front springs.
7. Remove the front wheels.
8. Support the front axle with a floor jack.
9. Remove sway bar end links on both sides. Save the 15mm bolts, to use for reassembly.
10. Remove front shocks (saving bolts for reinstallation).
11. Carefully bend brake line bracket at frame to horizontal position (see illustration 3).
12. While supporting front differential with a floor jack, remove driver side U-bolts.
13. Remove front driver side leaf spring front nuts (27mm) and rear nuts (21mm), leaving spring eye bolts in place.
14. Lower axle to clear spring. Remove spring bolts and spring.

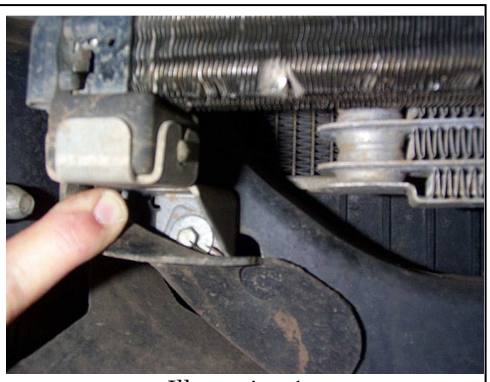

Illustration 1

Illustration 2

Illustration 3

TECH TIP: Factory spring bolts are secured with loctite, which makes removal difficult. By warming the nut with a propane torch to approx. 300 degrees Fahrenheit, the loctite will release and the hardware can be removed with hand tools. (WARNING: Have Fire Extinguisher handy whenever using a open flame on or near any vehicle.)

15. Install new Revtek spring using existing hardware. DO NOT TIGHTEN.
16. Raise axle to spring and secure with new 9/16” U-bolts and nuts supplied, making sure center pin is seated properly.
17. Repeat steps 12 – 16 on passenger side

REVTEK INDUSTRIES
INSTALLATION INSTRUCTIONS FOR 2000-2005
FORD 4WD EXCURSION

FRONT OF VEHICLE – DISASSEMBLY AND ASSEMBLY (Continued)

18. Remove OEM cast track bar bracket on driver side. Save the (2) 15mm bolts for later reuse.

TECH TIP: The two 15mm bolts are secured with loctite, which makes removal difficult. By warming the nut with a propane torch to approx. 300 degrees Fahrenheit, the loctite will release and the hardware can be removed with hand tools. (WARNING: Have Fire Extinguisher handy whenever using a open flame on or near any vehicle.)

19. Use a pitman arm puller to remove the pitman arm.
20. Install new pitman arm using red loctite. Torque to 185 ft./lbs.
21. Install Revtek track bar bracket. Use existing bolts and pal nuts on frame and use new ½" bolt in crossmember. Install ½" bolt from front of vehicle and use flat washers under head of bolt and nut. Torque bolts to 90 ft./lbs.
22. Remove upper sway bar mounts from inside of frame on both sides. Relocate under frame using OEM hardware (see illustration 4). Install provided sway bar support brackets, using ½" x 2" bolts, nuts and washers. Torque to specs.
23. Install new Revtek shocks, P/N R2615, and torque mounting hardware to specs.
24. Install drag link to pitman arm utilizing new cotter pin and torque to specs.
25. Install tires. Set vehicle on ground and torque wheels to factory specs.
26. Install sway bar end links using OEM hardware.
27. Tighten spring eye mounting bolts. Torque to spec.
28. Install track bar into new mount using OEM 30mm bolt. Torque to 135 ft./lbs.

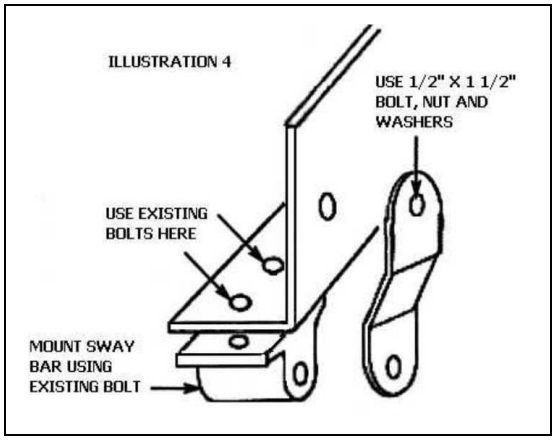

TECH TIP: Turning steering slightly will help align bolt.

29. If bumper was removed, reinstall air conditioning cooler supports and then reinstall bumper by reversing steps 3 and 4, then torque to spec.

REVTEK INDUSTRIES
INSTALLATION INSTRUCTIONS FOR 2000-2005
FORD 4WD EXCURSION

REAR OF VEHICLE – DISASSEMBLY AND ASSEMBLY

1. Block front wheels to prevent vehicle from moving in either direction.
2. Lift the vehicle from the center of the rear differential housing, leaving the jack in place to support the differential.
3. Support the frame with jack stands forward of the rear springs.
4. Remove rear wheels and shocks.
5. Remove the U-bolts on driver side only.
6. Carefully lower the floor jack, creating just enough room to remove the factory block and replace with the Revtek lift block between the spring pad and spring pack with the locating pin facing down. Make sure that the small end of taper on the block faces toward the front of the vehicle.
7. Raise the floor jack slightly, making sure center pin from spring is located in hole.
8. Put in the new U-bolts, washers and nuts supplied in the kit; torque to spec.
9. Repeat step 5 – 8 on passenger side
10. Install Revtek shocks P/N R3319 and torque hardware to specs.
11. Cut off excess u-bolt to prevent body damage, if applicable.
12. Install tires and lower vehicle to ground. Torque wheels to factory specs.
13. CHECKS AND ADJUSTMENTS:
    - ☐ Check all hardware for tightness after 100 miles and after off road use.
    - ☐ Headlights should be adjusted.
    - ☐ Vehicle must be aligned.

PRODUCT SAFETY LABEL MUST BE INSTALLED INSIDE CAB

IN PLAIN VIEW OF ALL OCCUPANTS

Limited Lifetime Warranty

Revtek Industries products are warranted to be free from material and workmanship defects for as long as the original retail purchaser owns the vehicle upon which such products were originally installed (proof of purchase required). The consumer will be responsible for removing from the vehicle and returning any defective item, freight prepaid, and for reinstallation. This warranty is non-transferable. Revtek Industries' limit of liability under this warranty is to repair or replace the product at Revtek Industries' option. Consequential costs such as, but not limited to labor fees, loss of use, loss of time or freight charges are not covered. Any product that has been abused, altered, incorrectly installed, or used in competition is not covered. Product finish is excluded from this warranty. Items that are subject to wear are not considered defective when worn and are not covered. The warranty is void if the "Warning to Driver" decal is not properly displayed on the vehicle. No other warranties are expressed or implied. We reserve the right to make changes in design, materials, and specifications without prior notice.

This warranty gives you specific legal rights and you may also have other rights which may vary from state to state. Some states do no allow limitations on how long an implied warranty lasts or allow the exclusion or limitation of incidental or consequential damages, the above limitation or exclusion may not apply to you.

There are no warranties, expressed or implied including any implied warranties of merchantability and fitness, which extend beyond this warranty period. There are no warranties that extend beyond the face hereof. Seller disclaims implied warranty of merchantability.

This warranty shall not apply to any product which has been improperly installed, modified or customized. Warranty does not apply to any components used for racing purposes or racing type activities.

To make a claim under this warranty contact Revtek Industries about the problem prior to removing any parts from the vehicle. If it appears that the part is warrantable, you will be given a Return Authorization (RA) number and asked to return the part freight prepaid. If the part is found to be warrantable, it will be repaired or replaced and returned to you. All freight charges are the customer's responsibility. If a replacement part is needed before the part in question can be returned, you must first purchase the replacement part. Then, if the part in question is deemed warrantable, you will be credited / refunded.

Revtek Industries, LLC
4288 SE International Way
Portland OR 97222
1-877-543-8869