INSTALLATION INSTRUCTIONS

Jeep/Dodge Perm-Lok

1100

PRE-INSTALLATION INSTRUCTIONS

These instructions have been designed for unaltered vehicles. Before you start, check for any variations. Each vehicle may dictate it's own control mount and cable routing. Therefore, you will need to study the pictures and use your good judgement or seek professional help. Lift kits may govern how and where the cable is routed. **Always keep the cable away from heat (exhaust) and rough or sharp edges.** If you are concerned about lower cable damage or abrasion, we recommend cutting a length (about 3 feet) of 5/8" ID plastic or rubber hose (garden or heater) to be slid over the cable before assembly. Please keep in mind, **the warranty is void** on heat damaged or abused cables. Before drilling, check for any electrical wires, hoses, etc.

LIMITED WARRANTY

4x4 Posi-Lok company warrants to the original retail purchaser that the 4x4 Posi-Lok is free from defects in material and/or workmanship for one (1) year from the purchase date when used under normal operating conditions on light trucks and SUV's. The warranty does not apply to 4x4 Posi-Lok Products that have been improperly engaged or installed. The consumer will be responsible for removing from the vehicle and returning to 4x4 Posi-Lok any defective item(s) with shipping costs prepaid. A copy of the original sales receipt is required for all warranty claims. The consumer must contact 4x4 Posi-Lok at (517) 278-7453 in order to receive a Returned Goods Authorization prior to shipping.

LIMITATION OF WARRANTIES

The loss of use of the product or vehicle, loss of time, inconvenience, commercial loss or consequential damages are not covered. 4x4 Posi-Lok reserves the right to change the design of any product without assuming any obligation to modify any product previously manufactured.

This warranty gives you specific legal rights and you may also have other rights which may vary from state to state. Some states do not allow limitations on how long an implied warranty lasts or allows the exclusion or limitation of incidental or consequential damages, the above limitation or exclusion may not apply to you.

There are no warranties, expressed or implied, including any implied warranties of merchantability and fitness, which extend beyond the face hereof. Seller disclaims implied warranty of merchantability.

LIMITATION OF LIABILITY

4x4 Posi-Lok's liability hereunder shall not exceed the purchase price of the product. 4x4 Posi-Lok shall not be liable for any incidental or consequential damages, whether direct or indirect, including, but not limited to, personal injury, property damage, economic loss, loss of profit, or the like. 4x4 Posi-Lok shall not be liable for any damages or defects of any kind whatsoever after installation of the 4x4 Posi-Lok, unless the purchaser has complied with any and all installation instructions. The limitation of liability as set forth above shall apply even to claims of negligence or strict liability against 4x4 Posi-Lok.

OPERATING INSTRUCTIONS

Engagement: Relax the throttle - no acceleration or deceleration. Shift the transfer case to desired 4x4 mode. Press the button and pull the cable into full engaged position. (Light on-off throttle action while pulling on the handle will help align gears for smooth engagement.) Release the button.

Disengagement: Place transfer case in 2WD mode. Press the button, push the cable into full disengaged position, and release the button. If moving, light on-off throttle action will help to relax the drive train. Disengagement may be easier with some models if the vehicle is stopped and put into reverse for a few inches while pushing the cable in.

Notes:

2WD Lo-range–Place the transfer case in 4WD Lo range, but do not engage the 4x4 Posi-Lok system. **Warning: Do not apply excessive torque in this mode.**

If a differential gear locker is used in the front axle, the driver can manually unlock the front axle to make very tight right turns on hard ground, then re-lock to continue.

Save these instructions and place with owner's manual.

4x4 Posi-Lok • 104 S. Michigan Avenue, Coldwater, MI 49036
517-279-7177 • www.4x4posi-lok.com

rev. 1/7/2009

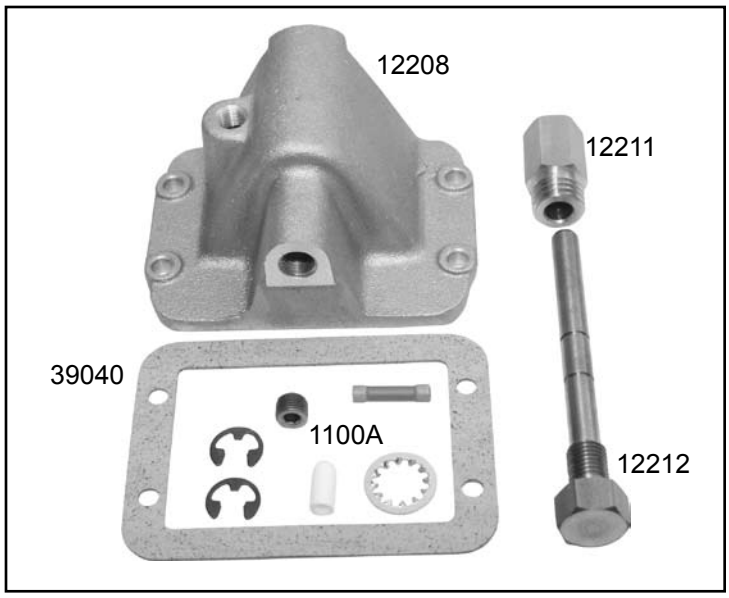

4X4 POSI-LOK SYSTEM

PARTS LIST

Part #	Qty	Description
12208	1	Axle Housing
12211	1	Perm-Lok Cap
12212	1	Perm-Lok Fork Rod
39040	1	Gasket
1100A	1	Bolt Pack
099000	2	Zip Tie

BOLT PACK 1100A

Qty	Description
1	Vinyl Vacuum Cap
2	3/8" E-Clip
1	22-18 ga. Butt Connector
1	1/8" Pipe Plug
1	1/2" Internal Tooth Lock Washer

PRE-INSTALLATION

VACUUM

Before you remove the CAD (Central Axle Disconnect) vacuum actuator, locate the source of the vacuum transfer case switch. Follow the vacuum lines from the actuator up into the engine compartment to the vacuum switch and to the vacuum source. Using the vacuum cap provided, plug off as close to the engine source as possible without disrupting any other vacuum requirements. See examples in figures 1 and 2.

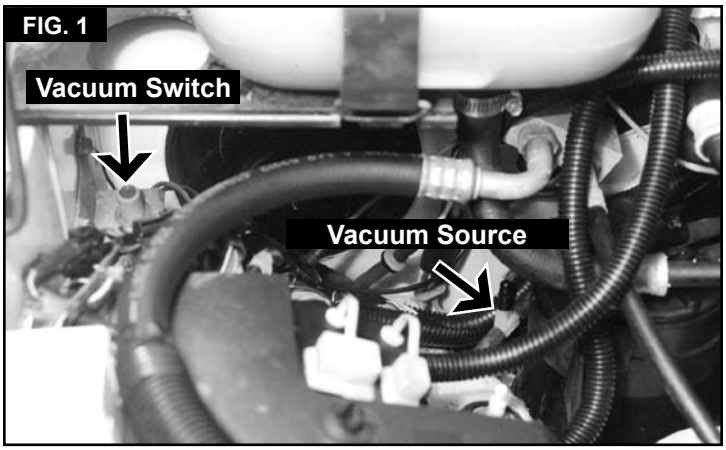

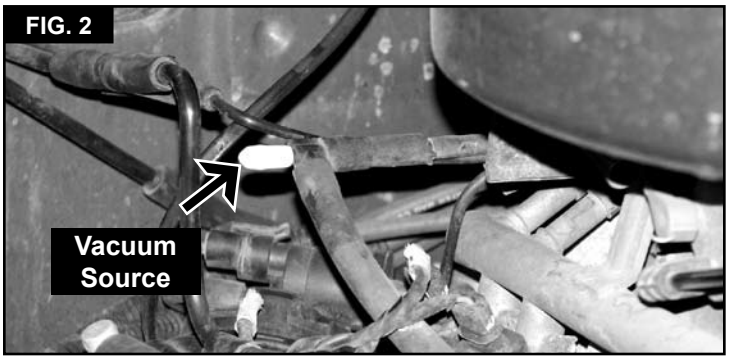

FORK UPGRADE

When the CAD cover is unbolted, some gear lube will run out. Inspect the fork and fork clips/wear pads for any necessary replacement. We recommend the original aluminum fork be replaced with cast iron fork part #100.

- It is broken and/or chipped in any places (Fig 3).
- The end of the fork moves more than ¼" in either direction and/or if it does not fit tightly on the shaft.
- The hole in the fork is oblong.

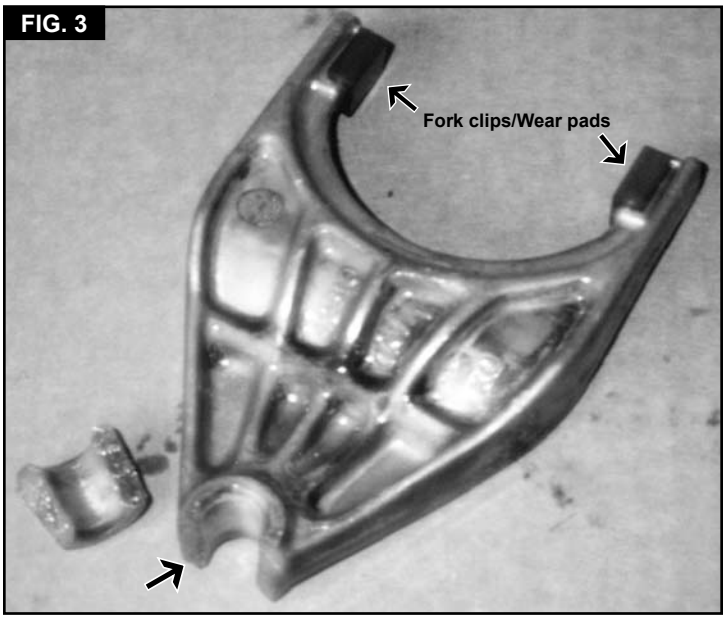

INSTALLATION INSTRUCTIONS

1. Park the vehicle on a clean, flat surface and block the rear wheels for safety. Put the transfer case in 2HI.
2. Locate the factory vacuum actuator housing on the front axle. Place a drain pan under the housing.
3. Remove the vacuum connections at the diaphragm (Fig 4). ***Note: Picture shows Dana 30; others will be similar.***

FIG. 4

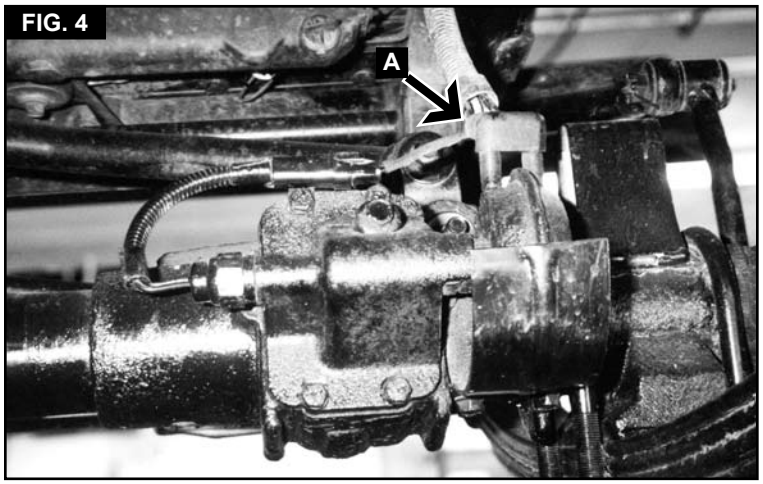

4. If equipped, remove the OE light switch wires from the actuator (Fig 4). ***Note: If you would like to have your 4wd dash light on at all times, strip the ends of the wires and connect them together with the provided butt connector.***
5. Tie the vacuum lines and wiring up in the engine compartment out of the way with the provided zip ties.
6. Unbolt the diaphragm shield from the axle tube (Fig 4). This will not be reused.
7. Remove the vent hose from the housing, if equipped.
8. Remove the four bolts mounting the actuator housing to the axle and remove the housing from the vehicle. Retain mounting hardware.
9. Cover the opening in the axle with a clean cloth. Thoroughly remove all the old gasket material from the housing mounting surface with a wire brush or scraper. Note: Be sure not to get any debris inside of the axle tube during this process. Remove the cloth when you are finished.
10. *Do the following only if the aluminum fork is to be reused:* Remove the three e-clips from the OE diaphragm shaft. Remove the vacuum diaphragm from the OE house to extract the OE aluminum fork. Force may be required to free the diaphragm.
11. If equipped, remove the axle vent tube from the OE housing. Install the vent tube on the new housing (12208) using RTV sealant on the threads. If the OE housing did not have an axle vent tube, plug the hole in the new housing with the provided pipe plug and RTV sealant on the threads (Fig 5).

FIG. 5

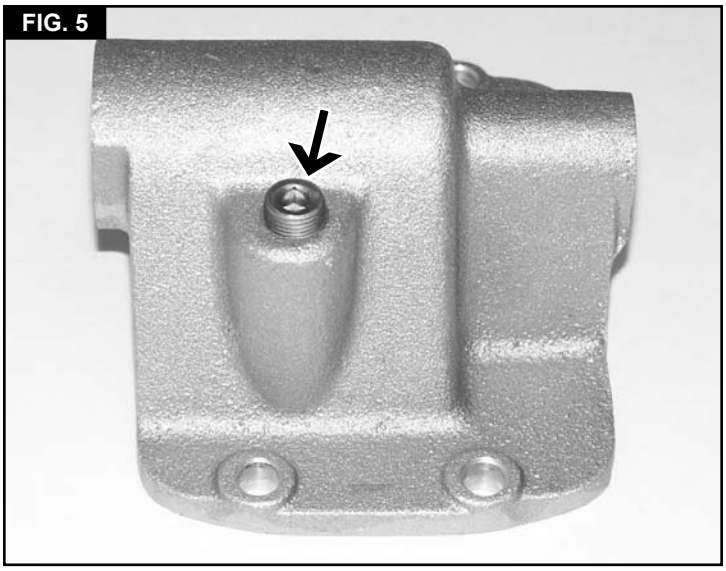

12. Apply RTV sealant to the threads of the provided brass housing cap (12211) and install it in the corresponding hole in the new housing (Fig 6). Tighten securely.

FIG. 6

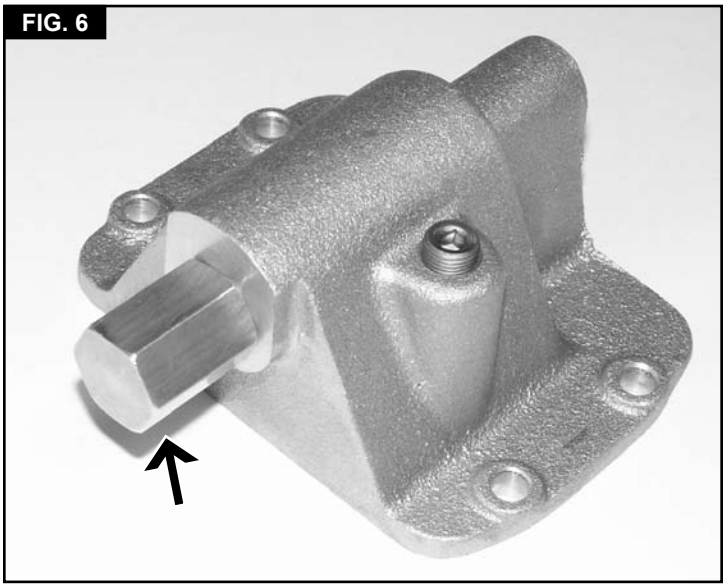

13. Install the provided ½" lock washer on the new steel fork rod (12212). Apply RTV sealant to the threads of the fork rod and start it into the housing. Place the fork (new or used) in the housing and onto the rod before completely installing the rod (Fig 7). Note: Ensure the fork is installed in the correct direction (Fig 7). Tighten the rod in the housing securely.

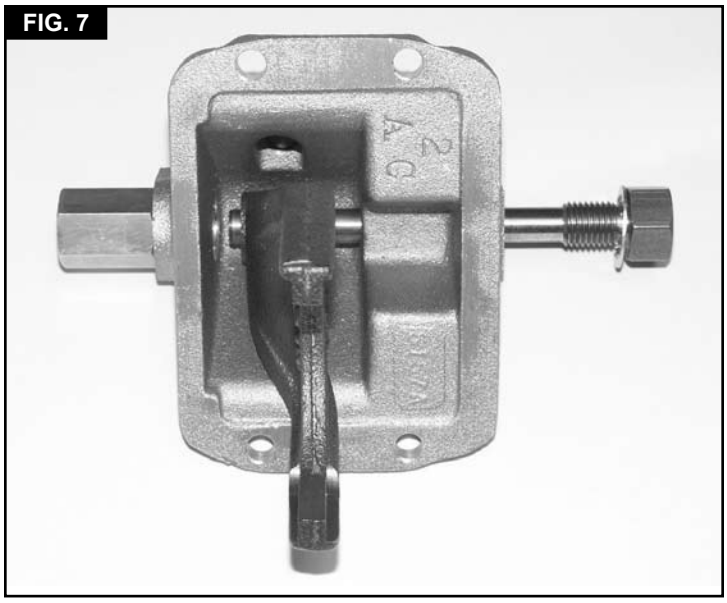
FIG. 7

14. Install the provided e-clips to the fork rod on each side of the fork (Fig 8).

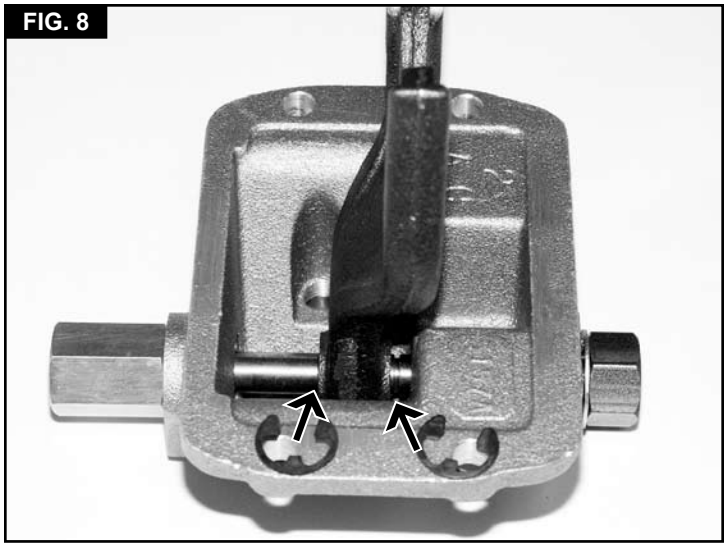
FIG. 8

15. Align the axle collar (Fig 9) with the axle spline (rotating the front drive shaft will aid in aligning the splines).

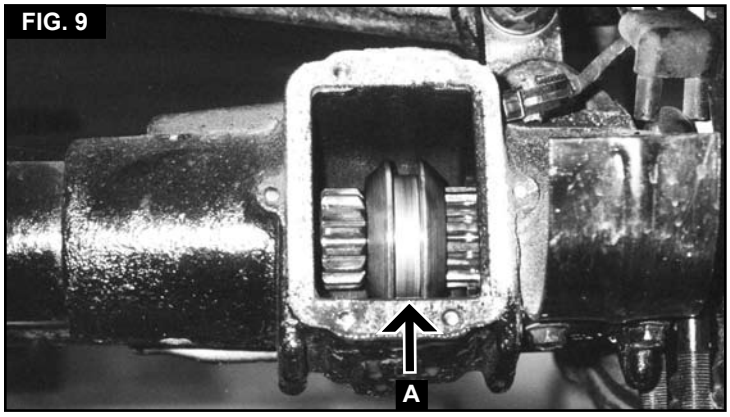

FIG. 9

16. Check both wear pads on the fork to see that they are in good condition and snapped securely on the fork. Install the gasket and align the fork fingers into the collar groove. Bolt the housing to the axle with the original mounting bolts and torque to 10 ft-lbs. Note: Do not use RTV on the gasket. It will case the gasket to distort.
17. Check for proper engagement. With the front wheels on the ground, the front driveshaft will no longer turn freely if the axles are connected correctly. If it does, ensure the fork is installed correctly. Also check for broken components in the differential and/or transfer case.
18. Check the front differential fluid level and fill as necessary.
19. Check all hardware for proper torque.
20. Check hardware after 500 miles.